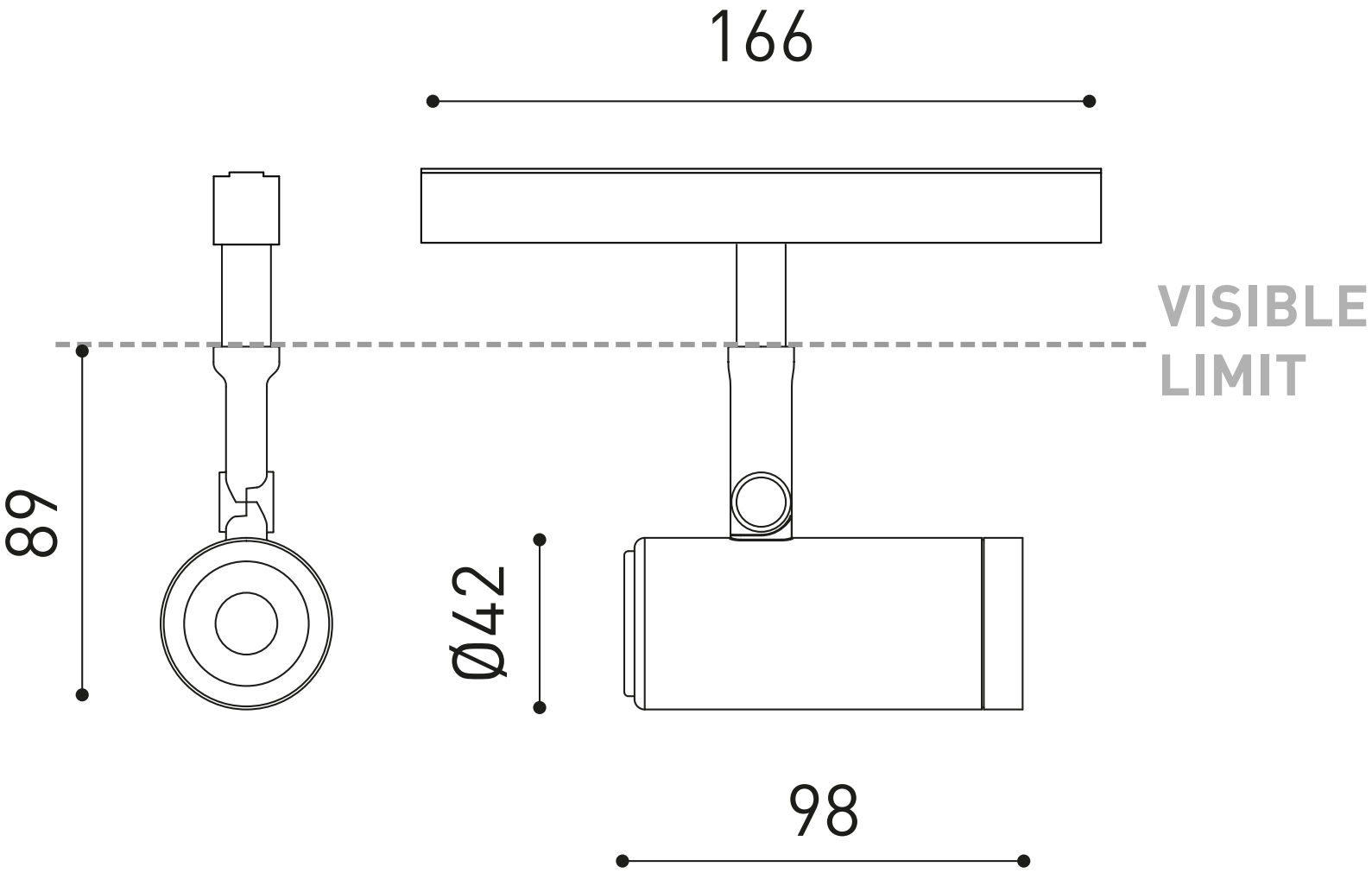
166
VISIBLE
LIMIT
89
Ø42
98